UCONN ENGR-ECE4243/6243 09/13/16, Due on 9/20/16, F. Jain

HW2 Finite barrier quantum well energy levels

Q. 1. (a) Determine the electron and hole (both light and heavy) energy levels and wavefunctions in the well of an $Al_xGa_{1-x}As$-GaAs multiple quantum well layer. Assume well thickness of 50Angstrom. Use 30% aluminum in AlGaAs. Assume energy band discontinuity $\Delta E_c/\Delta E_v$ ratio to be 60 to 40 in conduction and valence bands, respectively.
(b) What is the effective well width L_{eff} of an infinite well which would give the same location of the first level in the conduction band as in the finite well problem done above in part (a). **Given:**

Effective masses: GaAs well	AlGaAs barrier [m_{hh}=heavy holes, m_{lh}=light holes]	
$m_e = 0.0665 m_o$	$m_e = 0.0916 m_o$	Electrons
$m_{hh} = 0.34\ m_o$	$m_{hh} = 0.466\ m_o$	Heavy holes
$m_{lh} = 0.094\ m_o$	$m_{lh} = 0.107\ m_o$	Light holes

E_g as a function of aluminum fraction $Al_xGa_{1-x}As = 1.424 + 1.247\ (x)$

Reference: Notes pp. 70-78.

Q1. Hint/Solution attached

Write your program and confirm the values shown in the solution/hint set.

Wave function and energy level in a finite well:

(a) Determine the electron and hole (both light and heavy) energy levels and wavefunctions in the well of an $Al_xGa_{1-x}As$-GaAs multiple quantum well layer. Assume well thickness of 50Angstrom. Use the effective masses as given on page 95 of the Ref. (S. Chuang, Physics of Optoelectronic Devices, Wiley, 1995). Use 30% aluminum in AlGaAs. For E_g in AlGaAs, use the relation given in 980 nm design set or notes or Chuang**. Assume energy band discontinuity to be 60 to 40 in conduction and valence bands, respectively.

Reference: S. Chuang, Chapter 3, John Wiley.

(b) What is the effective well width L_{eff} of an infinite well which would give the same location of the first level in the conduction band as in the finite well problem done above in part (a).

Given:

Effective masses: GaAs well

$m_e = 0.0665 m_o$

$m_{hh} = 0.34\ m_o$

$m_{lh} = 0.094\ m_o$

AlGaAs barrier

$m_e = 0.0916 m_o$

$m_{hh} = 0.466\ m_o$

$m_{lh} = 0.107\ m_o$

E_g as a function of aluminum fraction $Al_xGa_{1-x}As = 1.424 + 1.247\ (x)$

(Find equations, which provide effective masses as a function of composition)

m_{hh}= heavy holes, m_{ll}=light holes.

Computation of conduction band ΔE_c and valence band ΔE_v discontinuities:

Find the band gap difference ΔE_g.

Solutions(a)

$\Delta E_c = 0.6\Delta E_g$

$\Delta E_v = 0.4\Delta E_g$

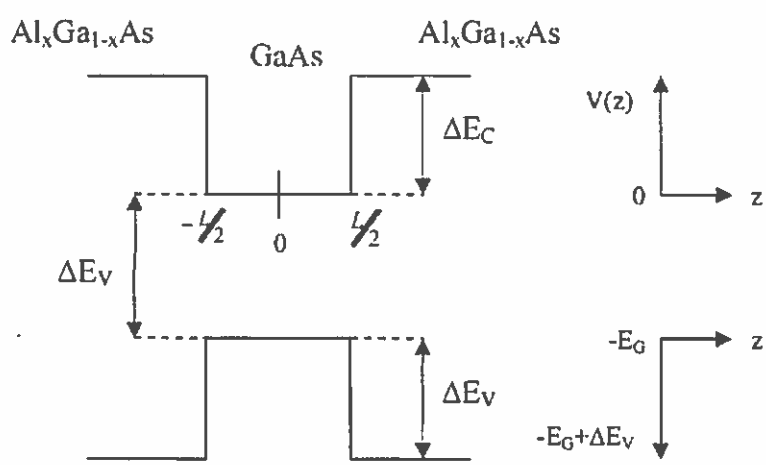

$E_g = 1.424 + 1.247x$

$\Delta E_g = 1.247x$
$= 1.247(0.3)$
$= 0.3741$ eV

$\Delta E_c = 0.6\Delta E_g$
$= 0.6(0.3741) = 0.2246$ eV

$\Delta Ev = 0.4\Delta E_g$
$= 0.4(0.3741) = 0.1496$ eV

Schrödinger equation:

$$\left[-\frac{\hbar^2}{2m}\nabla^2 + V(z)\right]\psi(x,y,z) = E\phi(x,y,z) \qquad (1)$$

The Schrödinger equation in a system with multiple layers. (the m_e values are different in the well (m_{ew}) and barrier (m_{eb})):

$$\left[-\frac{\partial}{\partial z}\frac{1}{m}\frac{\partial}{\partial z} + V(z)\right]\phi(z) = E\phi(z) \qquad (2)$$

Schrodinger equation in a well:

$$-\frac{\hbar^2}{2m_{ew}}\frac{\partial^2\varphi(z)}{\partial z^2} = E\phi(z)$$

$$\frac{\partial^2\varphi(z)}{\partial z^2} = -\frac{2m_{ew}}{\hbar^2}E\phi(z)$$

$$= -k^2\phi(z) \qquad (3)$$

$$k^2 = \frac{2m_{ew}E}{\hbar^2} \qquad (4)$$

Boundary Conditions

$$1.\ \phi\left(z = \frac{L^+}{2}\right) = \phi\left(z = \frac{L^-}{2}\right) \qquad (5)$$

$$2.\ \frac{1}{m_{eb}}\frac{d}{dz}\phi\left(z = \frac{L^+}{2}\right) = \frac{1}{m_{ew}}\frac{d}{dz}\left(z = \frac{L^-}{2}\right) \qquad (6)$$

$$-\frac{L}{2} < z < \frac{L}{2}$$

In the well the solution of Equation (3) is: $\phi(z) = C_2\cos kz + C_2'\sin kz$ **(7)**

Even Wavefunction: $\phi(z) = C_2 \cos kz$ **(7a)**

Odd Wavefunction: $\phi(z) = C_2' \sin kz$ **(7b)**

In the barrier $\left(|z| > \frac{L}{2}\right)$, Equation (2) reduces to:

$$\left[-\frac{\hbar^2}{2m_{eb}}\frac{\partial^2\phi(z)}{\partial z^2} + V_0\phi(z)\right] = E\phi(z)$$

$$-\frac{\hbar^2}{2m_{eb}}\frac{\partial^2\phi(z)}{\partial z^2} + (V_0 - E)\phi(z) = 0, \text{ where } V_0 = \Delta E_C$$

$$\frac{\partial^2\phi}{\partial z^2} = +\frac{2m_{eh}}{\hbar^2}(V_0 - E)\phi(z) \qquad \textbf{(8)}$$

$$\alpha^2 = \frac{2m_{eb}(V_0 - E)}{\hbar^2} \qquad \textbf{(9)}$$

For $z > \frac{L}{2}$, the solution is: $\phi(z) = C_1 e^{-\alpha(z-L/2)} + C_1' e^{+\alpha(z-L/2)}$

At $z = \infty$, the second term becomes infinite. For a physical solution $C_1' = 0$, therefore:

$$\phi(z) = C_1 e^{-\alpha(z-L/2)} \text{ for } z > \frac{L}{2}$$

$$\text{or } \phi(z) = C_1 e^{+\alpha(z+L/2)} \text{ for } z < \frac{-L}{2}$$

Evaluation of C_2, C_1 for even wavefunction

First boundary condition, Equation (5):

$$\phi\left(z = \frac{L^+}{2}\right) = \phi\left(z = \frac{L^-}{2}\right)$$

$$C_1 e^{-\alpha\left(\frac{L}{2}-\frac{L}{2}\right)} = C_2 \cos kz$$

$$C_1 = C_2 \cos k\frac{L}{2} \qquad \textbf{(10)}$$

Using the second boundary condition,

$$\frac{1}{m_{eb}}\frac{d}{dz}C_1 e^{-\alpha(z-L/2)}\Big]_{z=\frac{L}{2}} = \frac{1}{m_{ew}}\frac{d}{dz}C_2\cos kz\Big]_{z=\frac{L}{2}}$$

$$\frac{1}{m_{eb}}C_1(-\alpha) = -\frac{1}{m_{ew}}C_2 k\sin k\frac{L}{2}$$

$$C_1 = C_2\frac{m_{eb}}{m_{ew}}\frac{k}{\alpha}\sin k\frac{L}{2} \qquad \textbf{(11)}$$

Dividing (11) by (10), we get the Eigenvalue equation:

$$1 = \frac{m_{eb}}{m_{ew}}\frac{k}{\alpha}\tan\frac{kL}{2}$$

$$\text{Eigenvalue equation:}\quad \tan\frac{kL}{2} = \frac{m_{ew}}{m_{eb}}\frac{\alpha\frac{L}{2}}{k\frac{L}{2}} \qquad \textbf{(12)}$$

Odd wave function Eigen equation is:

$$\cot k\frac{L}{2} = -\frac{m_{ew}}{m_{eb}}\left(\frac{\alpha L/2}{k L/2}\right) \qquad \textbf{(13)}$$

Determination of k and α:

In addition to the Eigenvalue equation, we need one more equation. By definition k and α are defined by Equation (9) and (4).

$$\alpha^2 = \frac{2m_{eb}(V_0 - E)}{\hbar^2} \qquad \textbf{(9)}$$

$$k^2 = \frac{2m_{ew}E}{\hbar^2} \qquad \textbf{(4)}$$

$$E = \frac{\hbar^2 k^2}{2m_{ew}}, \text{ substitute in (4):}$$

$$\alpha^2 = \frac{2m_{eb}}{\hbar^2}V_0 - \frac{2m_{eb}}{\hbar^2}\frac{\hbar^2 k^2}{2m_{ew}} \qquad \textbf{(14)}$$

$$k^2\frac{2m_{eb}}{2m_{ew}} + \alpha^2 = 2\frac{m_{ew}}{\hbar^2}V_0$$

$$k^2 + \frac{m_{ew}}{m_{eb}}\alpha^2 = 2\frac{m_{eb}}{\hbar^2}V_0$$

Multiply by $\left(\frac{L}{2}\right)^2$: $\left(k\frac{L}{2}\right)^2 + \frac{m_{ew}}{m_{eb}}\left(\frac{\alpha L}{2}\right)^2 = \frac{2m_{eb}}{\hbar^2}V_0\left(\frac{L}{2}\right)^2$

$$\alpha' = \sqrt{\frac{m_{ew}}{m_{eb}}}\alpha$$

$$\left(k\frac{L}{2}\right)^2 + \left(\frac{\alpha' L}{2}\right)^2 = \frac{2m_{eb}}{\hbar^2}V_0\left(\frac{L}{2}\right)^2 \qquad \textbf{(15)}$$

$V_0 = \Delta E_C$ in the conduction band.

k_0 and α are found for even and odd wave functions using the Eigenvalue and equation 6.

The Matlab code on the following page plots α vs. E. The eigenenergy is the point of intersection of the two lines (see page 8 for plots).

Input: $V_0 = \Delta E_C$, L = 50 Å, m_{eb}, m_{ew}
Output: Equation (15) and (12), give k, α' (or α). Once k is known, using Equation (4) we get:

$$E = \frac{\hbar^2 k^2}{2m_{ew}} \qquad \textbf{(4)}$$

$$\phi(z) = C_2 \cos kz \qquad \textbf{(7a)}$$

The points of intersection are:

Electrons	E_{C1} = 72.5 meV
Heavy Holes	E_{HH1} = 22.3 meV
Light Holes	E_{LH1} = 52.9 meV

```
mo=9.109*10^-31;
h=6.626*10^-34/(2*3.1415);
q=1.6*10^-19;
l=50*10^-10;

%for electrons
%v0=.22446*q;
%mb=0.0916*mo;
%mw=0.0665*mo;

%for Heavy holes
v0=.14964*q;
mb=0.466*mo;
mw=0.34*mo;

%for Light holes
v0=.1496*q;
mb=0.107*mo;
mw=0.094*mo;

e1=0:.001:1
e2=0:.001:1

alpha1=(mb./mw)*sqrt((2.*mw.*e1*q)/h^2).*tan(sqrt((2.*mw.*e1.*q)./h^2)*(1/2));
alpha2 = sqrt(2*mb*(v0-e2*q)/h^2);
plot(e1,alpha1,e2,alpha2);
xlabel('Ev (eV)');
ylabel('Alpha');
title('Alpha vs Ev (eV) For Heavy Holes');
```

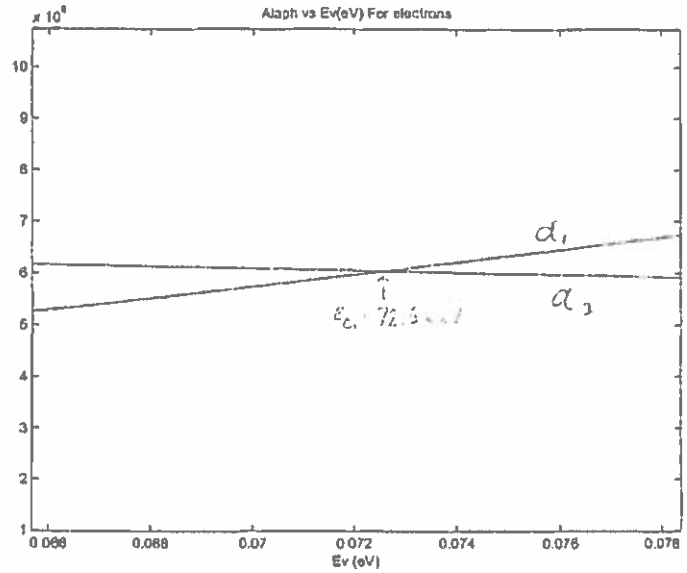
Alaph vs Ev(eV) For electrons
x 10^8
Ev (eV)
a1
a2

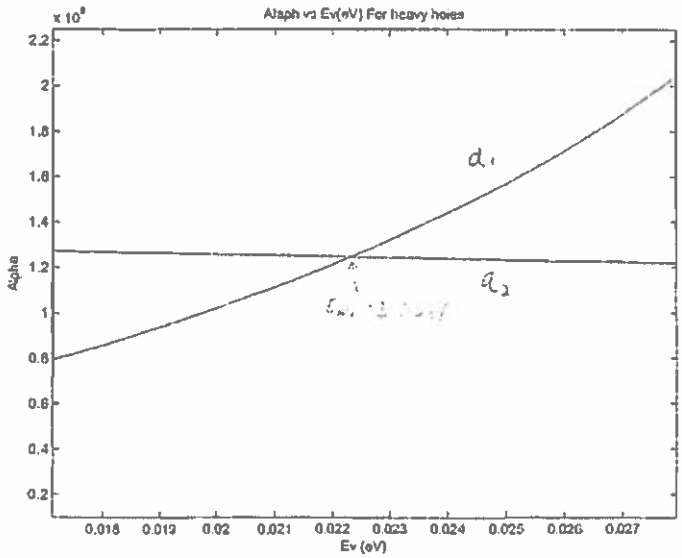
Alaph vs Ev(eV) For heavy holes
x 10^8
Alpha
Ev (eV)
a1
a2

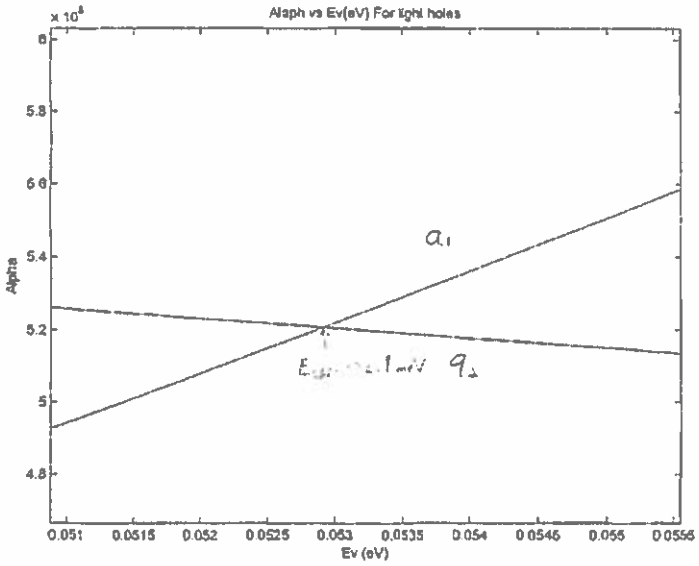
Alaph vs Ev(eV) For light holes
x 10^8
Alpha
Ev (eV)
a1
a2

(b) L_{eff} is the length of an infinite well which has the same energy levels as a finite well.

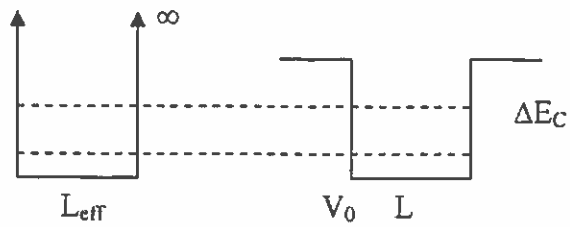

The effective width, L_{eff} can be found by:

$$L_{eff} = \sqrt{\frac{\pi^2 \hbar^2}{2m_e^* E}}$$ → E_1 is the first energy level.

E_{C1}: electrons
E_{HH1}: heavy holes
E_{LH1}: light holes

$$L_{eff} = \sqrt{\frac{\pi^2 (1.06\times10^{-34})^2}{2(0.065)(9.11\times10^{-31})(1.16\times10^{-20})}} = 88.3 \text{ Å}$$

$$L_{eff} = \sqrt{\frac{\pi^2 (1.06\times10^{-34})^2}{2(0.034)(9.11\times10^{-31})(3.57\times10^{-21})}} = 70.4 \text{ Å}$$

$$L_{eff} = \sqrt{\frac{\pi^2 (1.06\times10^{-34})^2}{2(0.094)(9.11\times10^{-31})(8.48\times10^{-21})}} = 86.9 \text{ Å}$$